AJ-010
AJ-011 Serie

LOW PROFILE - SINGLE PORT

Specifications

Material

Housing :	High Strength Thermoplastic Polyester
Contacts :	Phosphor Bronze
Contact Plating :	Gold Over Nickel On Mating Ared, Tin-lead Alloy On Tails
Shield :	Copper Alloy, Tin Plated

Electrical

UL & cUL File:	E131820
FCC File :	E149026

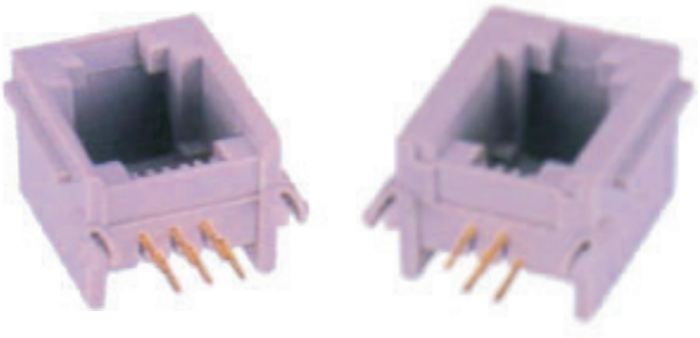

Ordering Information

AJ-XXX-X-X

NUMBER OF POSITIONS
010 - Flanged
011 - flangeless

NUMBER OF POSITIONS & CONTATCS
A = 4p4c B = 6p2c
C = 6p4c D = 6p6c

GOLD PLATING
1 = 15u , 3 = 50u
2 = 30u , 4 = 6u

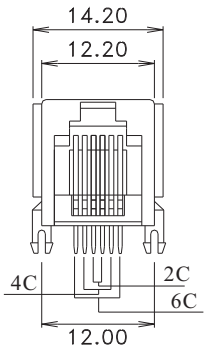

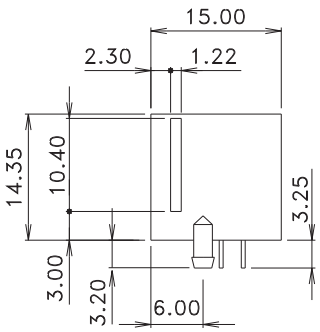

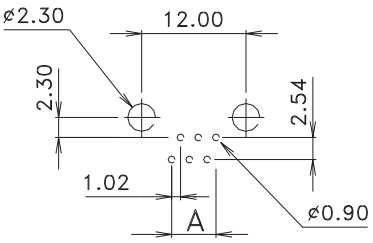

PCB LAYOUT

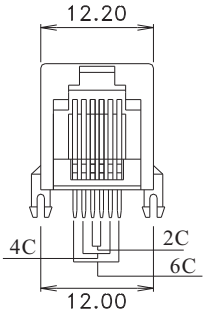

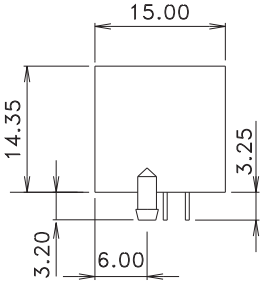

Number Of positions	A
2	1.02
4	3.06
6	5.10